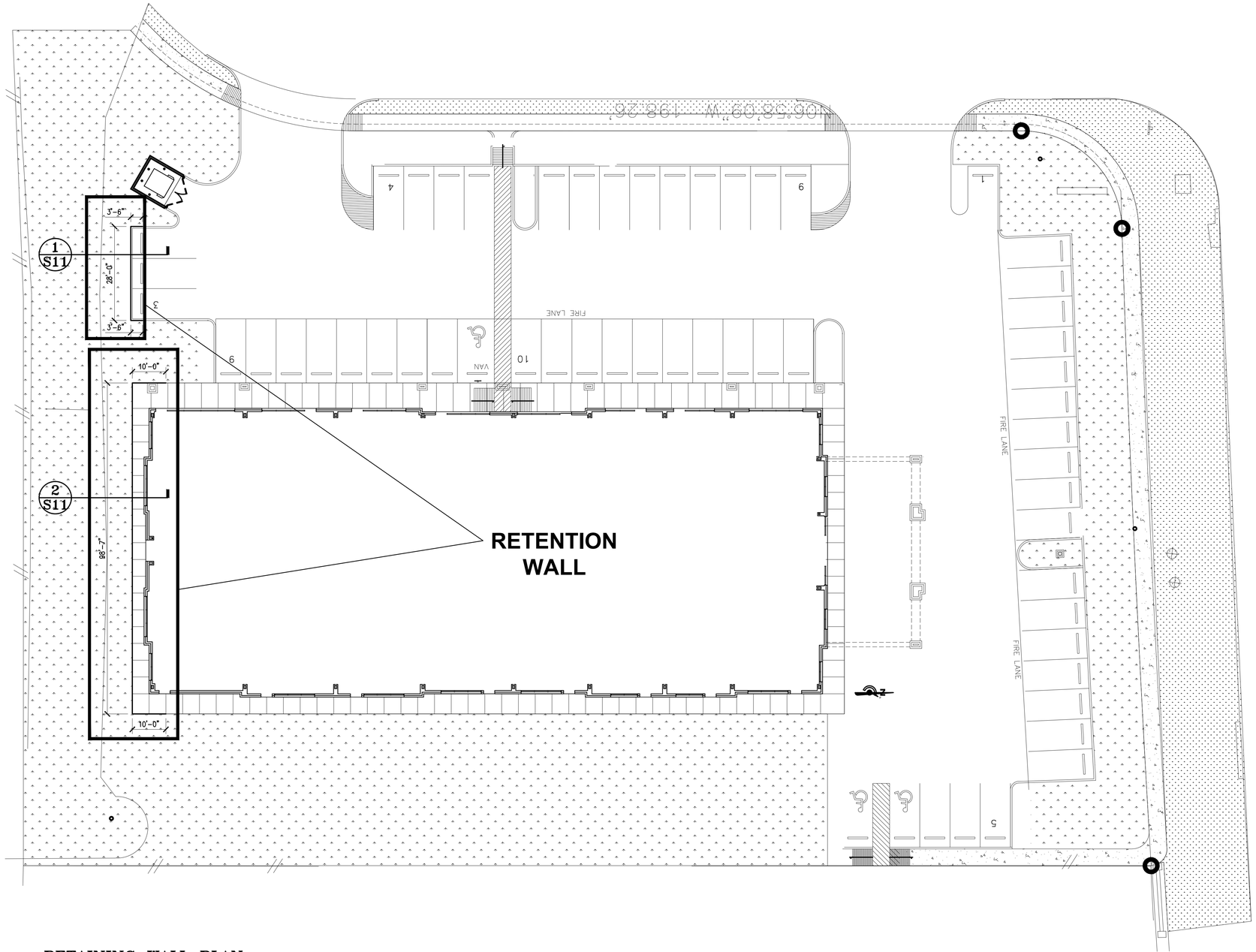

RETAINING WALL PLAN

SCALE: 1/16"= 1'-0"

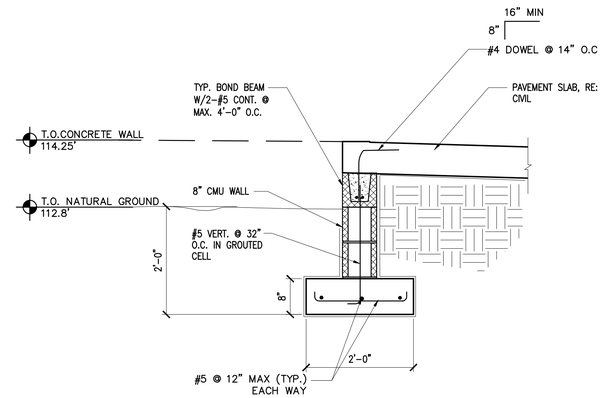

1 **SECTION:** AT PARKING LOT

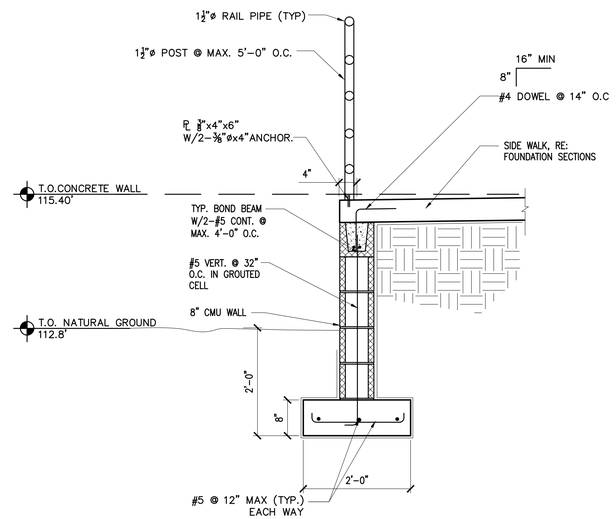

2 **SECTION:** AT BUILDING SIDE WALK

06/11/19

STATE OF TEXAS
M. W. MIRZA
84151
LICENSED
PROFESSIONAL ENGINEER

PE
BUILDINGS
BRIDGES
INSPECTIONS
MARINE STRUCTURES
CIVIL ENGINEERING &
STRUCTURAL ENGINEERING

PARAMOUNT ENGINEERING LLC

10145 LONG POINT DR.
HOUSTON, TX 77043
TEL. : (713) 636-9977
FAX : (281) 888-9128
CEL. : (713) 204-1742

TBPE REGISTRATION # F-3394

DRAWN BY: AS	CHECKED BY: MM

PROJ. NO.: PE19-105

THE MONTESSORIOM AT BELLA TERRA

23421 FM 1093 RD.
RICHMOND, TX 77406

NO.	DESCRIPTION	DATE
1	FINAL SCHEME	02.01.19
2	REV.FINAL SCHEME	02.07.19
3	CD REVIEW	04.15.19

RETAINING WALL PLAN & DETAILS

Project No.	1801.74
Date	
Drawn by	
Checked by	
Sheet No.	S11